Category

Street workout

www.zaidimuaiksteles-bonita.lt

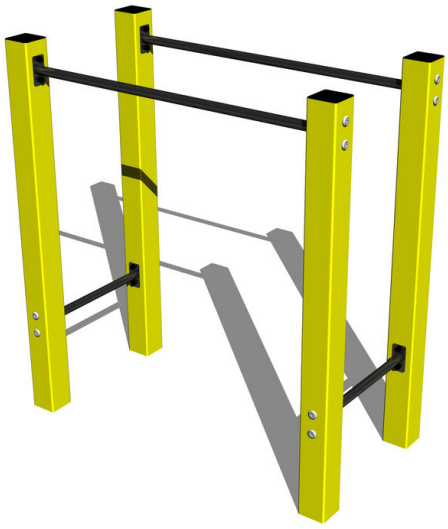

# Street workout element WP002YD - yellow

Product type WP-002YD-10

## Basic information

| | |
|---|---|
| Age category | Not specified |
| Minimum area | 3,65 m x 4,3 m |
| Equipment measurements | 0,65 m x 1,3 m x 1,31 m |
| Free fall height: | 1 m |
| Load capacity: | 78 kg |
| Max. number of users: | 1 |
| Fall zone: EN 1177 | null |
| Designation: | exterior |
| Availability of spare parts: | supplied by the |
| Certificate of Compliance: | ČSN EN 16630 |

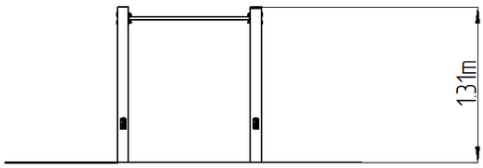


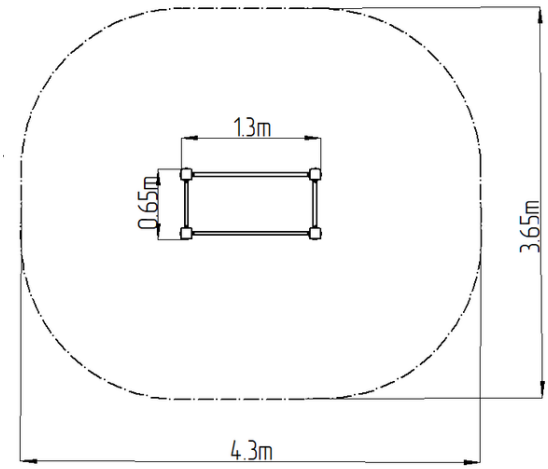


## Material

Metal units - structural steel

## Finish

Duplex powder coated with coat curing
Hot-dip galvanizing

## Description

The support structure of the workout element is made of structural steel which is protected against corrosion by zinc coating, resulting in a very prolonged service life of the workout elements or duplex powder coated with coat curing according to RAL to prevent corrosion. These structures are anchored to concrete footings with zinc anchors. All other metallic elements, such as handles, parallel bars etc., are also zinc coated or duplex powder coated with coat curing according to RAL to prevent corrosion or, if required by the customer, the elements can be made in stainless steel. All connecting material is zinc or stainless steel coated.

## Equipment

Color variants: blue-black, red-black, yellow-black, green-black, grey-black, orange-black.

**We reserve the right to change products without prior notice, which will, from our point of view, improve quality. The pictures are only informative and the products shown may differ from the products that we currently supply. We also reserve the right to make printing errors and assume no responsibility for their possible consequences. Otherwise, our terms and conditions apply.**