Category

Playground » Trampolines

www.zaidimuaiksteles-bonita.lt

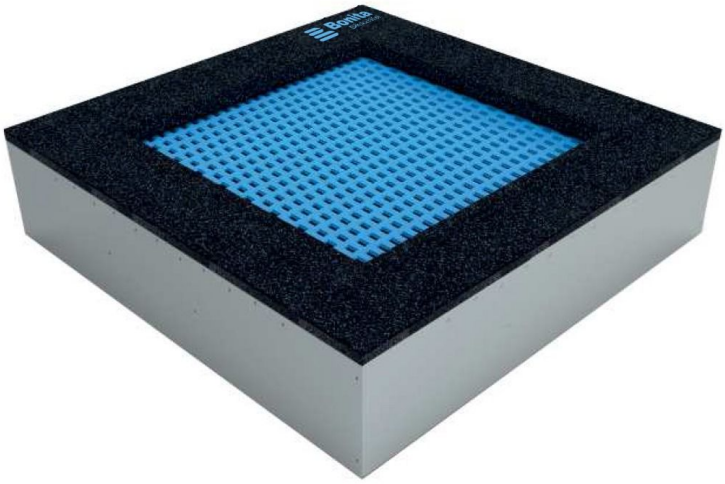

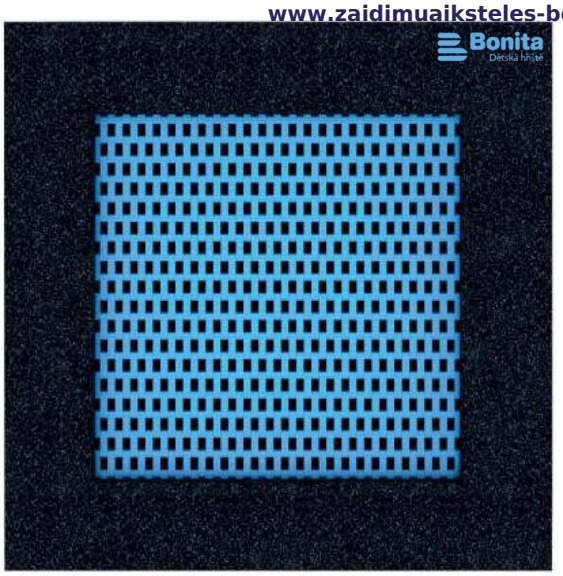

Trampoline TR-C180

Product type TR-C180-B

Basic information

Age category	0 - 15 years
Minimum area	5,2 m x 5,2 m
Equipment measurements	1,78 m x 1,78 m x m
Free fall height:	1.0 m
Load capacity:	130 kg
Max. number of users:	1
Fall zone: EN 1177	null
Designation:	exterior
Availability of spare parts:	supplied by the
Certificate of Compliance:	ČSN EN 1176 - 1

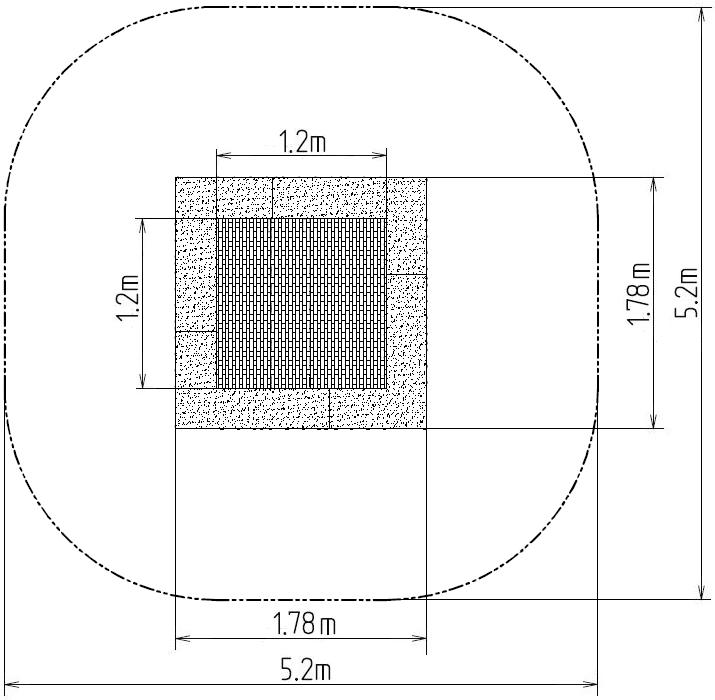

Material

Frame – galvanized steel
Lamellas – plastic
Cushioning surface – PEDM/SBR
Springs – galvanized steel

Finish

Description

Trampolines guarantee magnificent and safe outdoor entertainment both for children and adults. The trampoline is to be placed into a prepared excavation and it consists of three main parts: the frame, jumping area and cushioning surface. The jumping area and cushioning surface are UV resistant.
Frame - made of high quality galvanized steel, corrosion resistant. The springs are hidden below the upper part of the frame and they are covered with a cushioning surface. he remaining part of the frame is anchored in the ground.
Jumping area - consists of a large number of lamellas designed for this purpose, connected with the frame by galvanized steel cables. Cable ends are connected to the frame through springs. Lamellas are of special plastic that is abrasion proof and weather resistant. Thanks to that, children can leave their shoes on when using the trampoline. The jumping area is provided with the anti-slippery surface as well.
Cushioning surface - made of special recycled rubber mixed with EPDM. The cushioning surface is anti-slippery and it serves to soften potential falls.

Equipment

Frame, jumping area, cushioning surface, springs. Four colour versions are available – blue, green, orange and yellow, environmental friendly.

We reserve the right to change products without prior notice, which will, from our point of view, improve quality. The pictures are only informative and the products shown may differ from the products that we currently supply. We also reserve the right to make printing errors and assume no responsibility for their possible consequences. Otherwise, our terms and conditions apply.