Category

Playground » UNIVERSAL tower sets » Tower units with a lower platform to 1 m

www.zaidimuaiksteles-bonita.lt

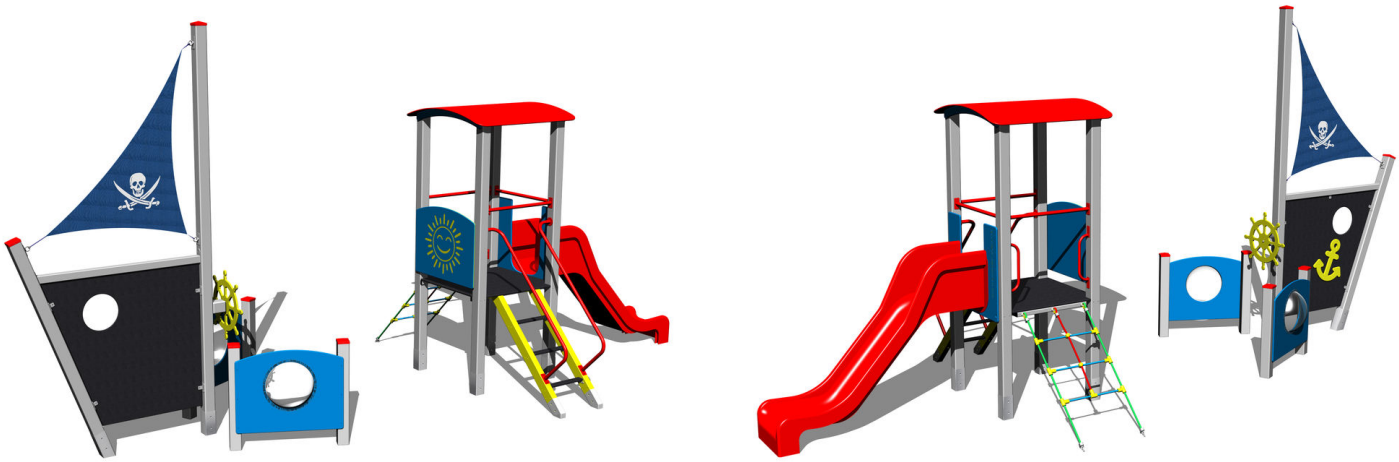

UNIVERSAL 4U142KS - silver

Product type 4U-142KS-10

Basic information

Age category	2 - 15 years
Minimum area	10,6 m x 5,8 m
Equipment measurements	7,09 m x 2,77 m x 3,48 m
Free fall height:	1 m
Load capacity:	486 kg
Max. number of users:	9
Fall zone: EN 1177	null
Designation:	exterior
Availability of spare parts:	supplied by the
Certificate of Compliance:	ČSN EN 1176 - 1, 2, 3

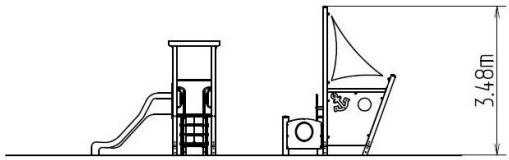

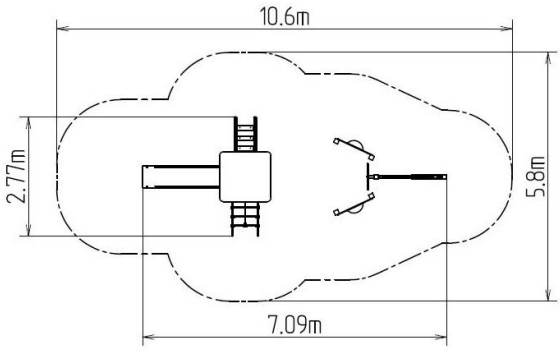

Material

Platform - HPL
Metal units - structural steel
Plastic units - HDPE, polyamide
Slide - fibreglass
Ropes and nets - polypropylene with a steel internal core
Apertures - plexiglass
Flag – polyester fabric

Finish

null
null

Description

The support structure of the tower unit is made of structural steel which is protected against corrosion by zinc coating, resulting in a very prolonged service life of the workout elements, and coating with baked paint KOMAXIT according to the RAL colour system. All other metallic elements are also zinc coated and treated with baked paint KOMAXIT according to the RAL colour system.
The slide is made from fibreglass. The surfaces of the slide, steps, etc. are made from high quality HDPE plastic (high density coloured polyethylene, which is characterised by high colour stability, UV resistance but mainly safety as it doesn't break and therefore there is no danger of injury to children by sharp fragments). The climbing net is made using HERKULES material (16 mm thick ropes made from polypropylene with a steel internal core) and is connected with plastic or aluminium joints. The platform and the drawing board are made from HPL (High-pressure laminate, which is characterised by high colour stability and water resistance). All fastening material is galvanized or stainless steel.

Equipment

Tower, slide, arched roof, barrier, post with a flag, drawing board, sloping net access, anchor, helm made from HDPE, 2x barrier with an aperture, sloping ramp with steps and metal handles.

We reserve the right to change products without prior notice, which will, from our point of view, improve quality. The pictures are only informative and the products shown may differ from the products that we currently supply. We also reserve the right to make printing errors and assume no responsibility for their possible consequences. Otherwise, our terms and conditions apply.