Category

Playground » UNIVERSAL tower sets » Tower units with a platform higher than 1 m

www.zaidimuaiksteles-bonita.lt

UNIVERSAL 4U203KW - brown

Product type 4U-203KW-15

Basic information

Age category	3 - 15 years
Minimum area	6,5 m x 7 m
Equipment measurements	3,32 m x 3,58 m x 3,63 m
Free fall height:	1,5 m
Load capacity:	432 kg
Max. number of users:	8
Fall zone: EN 1177	null, 38 m^2
Designation:	exterior
Availability of spare parts:	supplied by the
Certificate of Compliance:	ČSN EN 1176 - 1, 2, 3

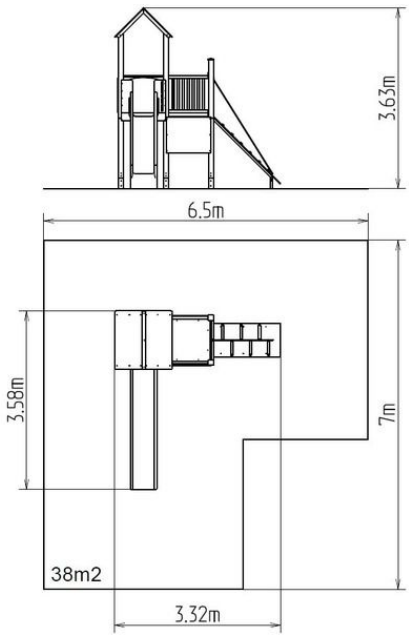

Material

Platform - HPL
Metal units - structural steel
Plastic units - HDPE, polyamide
Slide - fibreglass
Ropes and nets - polypropylene with a steel internal core
Roof - HPL

Finish

Duplex powder coated with coat curing
Hot-dip galvanizing

Description

The support structure of the tower unit is made of structural steel which is protected against corrosion by zinc coating, resulting in a very prolonged service life of the workout elements or duplex powder coated with coat curing according to RAL to prevent corrosion. All other metallic elements are also zinc coated or duplex powder coated with coat curing according to RAL to prevent corrosion.
The slide is made from fibreglass. The surfaces of the slides, steps, etc. are made from high quality HDPE plastic (high density coloured polyethylene, which is characterised by high colour stability, UV resistance but mainly safety as it doesn't break and therefore there is no danger of injury to children by sharp fragments). The rope is made using HERKULES material (16 mm thick ropes made from polypropylene with a steel internal core). The platforms and the drawing board are made from HPL (High-pressure laminate, which is characterised by high colour stability and water resistance). The roof is made from HPL (High-pressure laminate, which is characterised by high colour stability, UV resistance and water resistance). All fastening material is galvanized or stainless steel.

Equipment

2x tower, slide, A-shaped roof, drawing board, sloping ramp with the rope and HDPE steps, 4x barrier from HDPE.

We reserve the right to change products without prior notice, which will, from our point of view, improve quality. The pictures are only informative and the products shown may differ from the products that we currently supply. We also reserve the right to make printing errors and assume no responsibility for their possible consequences. Otherwise, our terms and conditions apply.