www.zaidimuaiksteles-bonita.lt

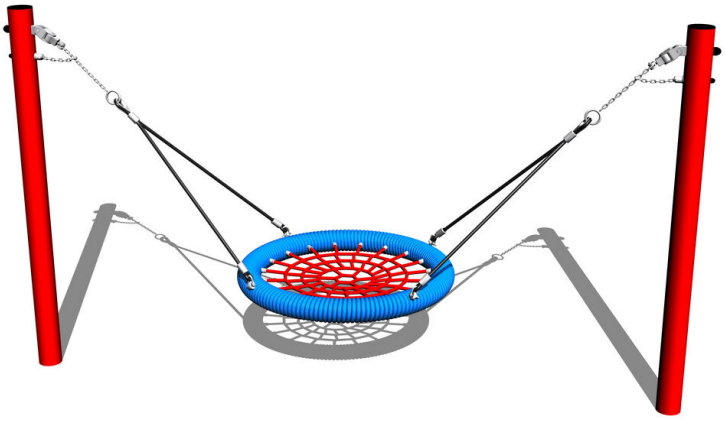

Chain swing Nest MINI RH160KR - red (f.h. 1 m)

Product type RH-160KR-10

Basic information

Age category	2 - 15 years
Minimum area	6 m x 7 m
Equipment measurements	3 m x 1,04 m x 1,71 m
Free fall height:	1 m
Load capacity:	270 kg
Max. number of users:	5
Fall zone: EN 1177	null
Designation:	exterior
Availability of spare parts:	supplied by the
Certificate of Compliance:	ČSN EN 1176 - 1, 2

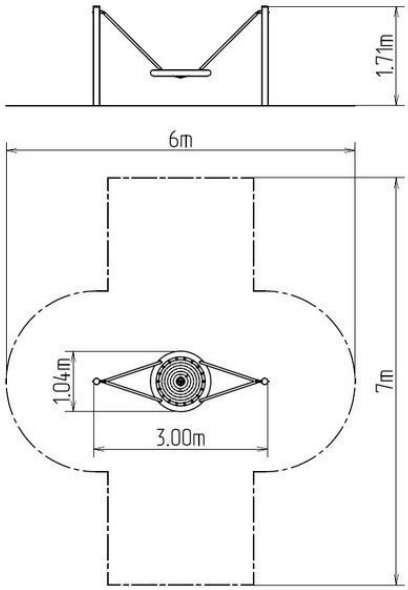

Material

Metal units - structural steel
The "Bird's Nest" seat - polypropylene rope with heavy duty fibres
The hanging ropes - polypropylene with a steel internal core

Finish

Duplex powder coated with coat curing
Hot-dip galvanizing

Description

The support structure of the swing is made from structural steel with a diameter of 108 mm, which is zinc coated or duplex powder coated with coat curing according to RAL to prevent corrosion and is fixed in a concrete bed. The swing is hung on the support structure using galvanized chains. The "Bird's Nest" seat is made from polypropylene rope with heavy duty fibres. The hanging ropes are made using HERKULES material (16 mm thick ropes made from polypropylene with a steel internal core). All fastening material is galvanized or stainless steel.

Equipment

We offer three color variants of the support structure - red, blue and brown.

We reserve the right to change products without prior notice, which will, from our point of view, improve quality. The pictures are only informative and the products shown may differ from the products that we currently supply. We also reserve the right to make printing errors and assume no responsibility for their possible consequences. Otherwise, our terms and conditions apply.