www.zaidimuaiksteles-bonita.lt

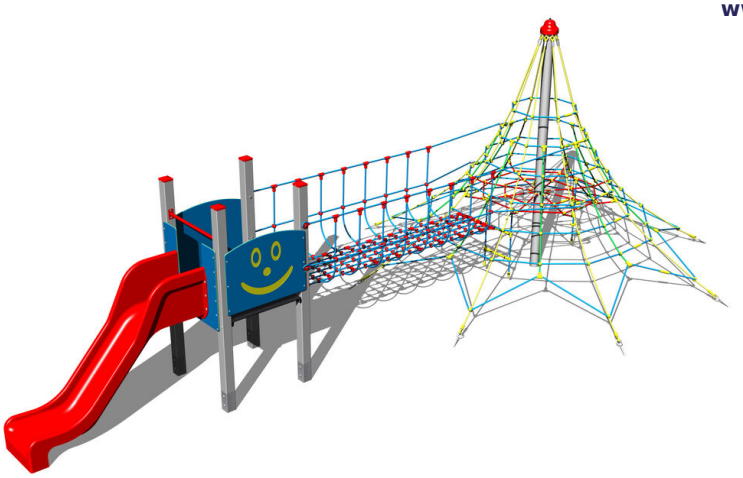

Rope pyramid with tower PY-831KS - silver

Product type PY-831KS-10

Basic information

Age category	3 - 15 years
Minimum area	12,5 m x 7,6 m
Equipment measurements	9 m x 4,6 m x 2,97 m
Free fall height:	1,0 m
Load capacity:	3480 kg
Max. number of users:	60
Fall zone: EN 1177	null
Designation:	exterior
Availability of spare parts:	supplied by the
Certificate of Compliance:	ČSN EN 1176 - 1, 3, 11

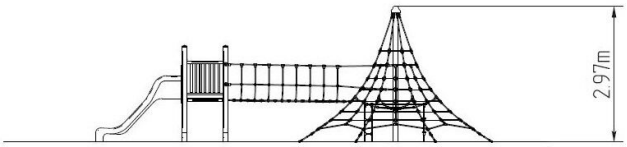

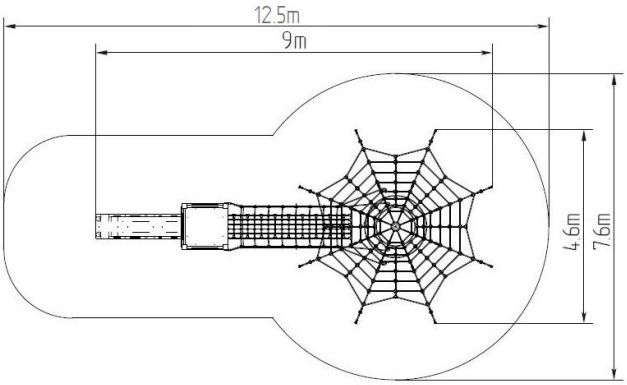

Material

Wooden parts - waterproof plywood
Plastic parts - polyamide, HDPE
Slide - fibreglass
Metal parts - structural steel
Ropes and nets - polypropylene with inner steel core

Finish

Duplex powder coated with coat curing
Hot-dip galvanizing

Description

The supporting pole Rope pyramid is made of structural steel. The column is protected against corrosion by hot-dip galvanizing and placed in a concrete bed. These structures are embedded in a concrete bed. The tower's supporting structures are made of structural steel. All other metal elements are also treated with galvanizing or duplex powder coated with coat curing according to RAL to prevent corrosion.
The ropes are made of HERKULES (16 mm polypropylene ropes with inner steel core) and are connected by plastic joints. The slide is made of fibreglass. The chute front is made of high-quality HDPE (high-pressure, full-colored polyethylene, which is characterized by high color stability, UV resistance and especially safety because it is brittle and there is no danger of injuring children with sharp chips). The platform is made of waterproof plywood or HDPE on request. All fasteners are galvanized or stainless steel.

We reserve the right to change products without prior notice, which will, from our point of view, improve quality. The pictures are only informative and the products shown may differ from the products that we currently supply. We also reserve the right to make printing errors and assume no responsibility for their possible consequences. Otherwise, our terms and conditions apply.