Category
Workout

www.zaidimuaiksteles-bonita.lt

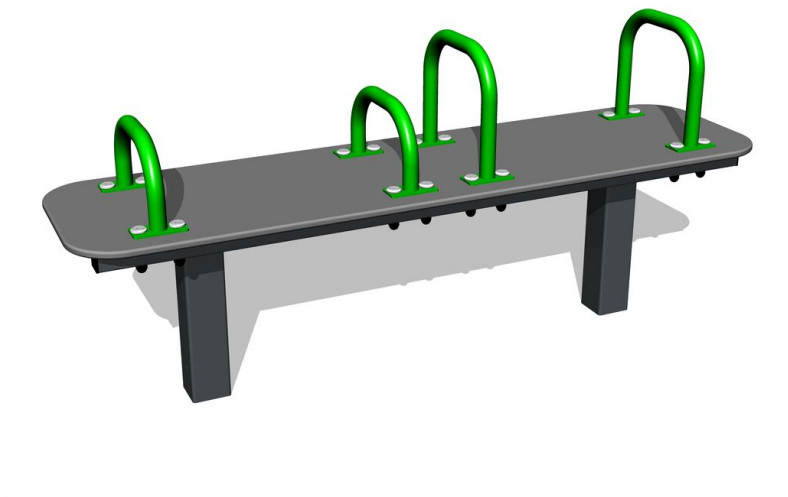

Street workout element - anthracite-green

Product type WP-8005AG-10

Basic information

Age category	Not specified
Minimum area	4,5 m x 3,4 m
Equipment measurements	1,5 m x 0,4 m x 0,69 m
Free fall height:	1 m
Max. number of users:	1
Fall zone: EN 1177	null
Certificate of Compliance:	ČSN EN 16630

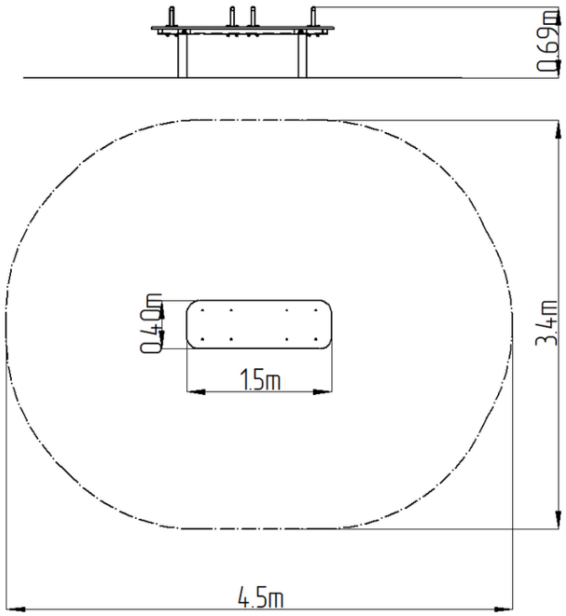

Material

Metal units - structural steel
Plastic units - HDPE

Finish

Duplex powder coated with coat curing
Hot-dip galvanizing

Description

The support structure of the workout element is made of structural steel which is protected against corrosion by zinc coating, resulting in a very prolonged service life of the workout elements or duplex powder coated with coat curing according to RAL to prevent corrosion. All other metallic elements, such as handles, parallel bars etc., are also zinc coated or duplex powder coated with coat curing according to RAL to prevent corrosion or, if required by the customer, the elements can be made in stainless steel.
All bench boards and steps are made of high quality HDPE (full-coloured high-density polyethylene, which is characterised by high colour stability, UV resistance and mainly safety because it is rigid and there is no risk of injury caused by sharp broken fragments). All connecting material is zinc or stainless steel coated.

Equipment

Color variants: blue-black, red-black, yellow-black, green-black, grey-black, orange-black.

We reserve the right to change products without prior notice, which will, from our point of view, improve quality. The pictures are only informative and the products shown may differ from the products that we currently supply. We also reserve the right to make printing errors and assume no responsibility for their possible consequences. Otherwise, our terms and conditions apply.