www.zaidimuaiksteles-bonita.lt



Merry-go-round with seats (mean 1,8 m) - lime

Product type KO-180KE-10

Basic information

Age category	2 - 15 years
Minimum area	6 m x 6 m
Equipment measurements	1,75 m x 1,75 m x 0,74 m
Free fall height:	0,5 m
Max. number of users:	7
Fall zone: EN 1177	null
Certificate of Compliance:	ČSN EN 1176-1 ed.2 +A1:2024 ČSN EN 1176-5:2020

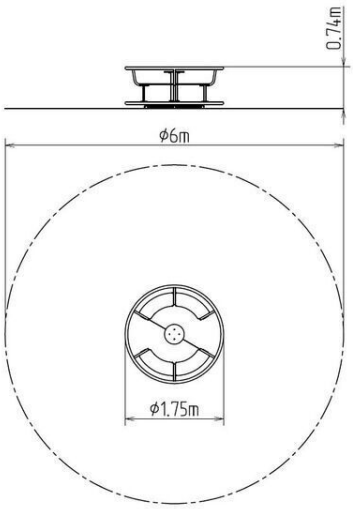

Material

Metal units - structural steel, non-slip sheet metal
Plastic units - HDPE

Finish

Duplex powder coated with coat curing
Hot-dip galvanizing

Description

The merry-go-round is made of black structural steel, sandblasted, duplex sprayed with powder coated and all other metal parts are made of black structural steel, sandblasted, duplex sprayed with powder coated. The structures are fixed in a concrete bed. The merry-go-round is constructed with durability and long life in mind. The rotation hub and the seats are made from high quality HDPE (full-coloured high-density polyethylene, which is characterised by high colour stability, UV resistance but mainly safety as it doesn't break and therefore there is no danger of injury to children by sharp fragments). The platform is made from a non-slip sheet metal. All fastening material is galvanized or stainless steel.

We reserve the right to change products without prior notice, which will, from our point of view, improve quality. The pictures are only informative and the products shown may differ from the products that we currently supply. We also reserve the right to make printing errors and assume no responsibility for their possible consequences. Otherwise, our terms and conditions apply.