Category

Playground » UNIVERSAL tower sets » Tower units with a lower platform to 1 m

www.zaidimuaiksteles-bonita.lt

UNIVERSAL 4U141D

Product type 4U-141D-10

Basic information

Age category	2 - 15 years
Minimum area	8,8 m x 7,3 m
Equipment measurements	4,79 m x 3,78 m x 3,13 m
Free fall height:	1 m
Load capacity:	Not specified
Max. number of users:	Not specified
Fall zone: EN 1177	null
Designation:	exterior
Availability of spare parts:	supplied by the
Certificate of Compliance:	ČSN EN 1176 - 1, 2, 3

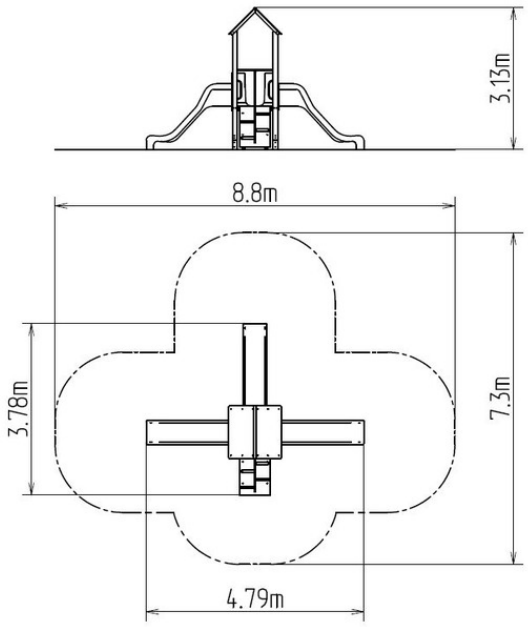

Material

Wooden units - thick glued wooden supports, water-proof plywood
Metal units - structural steel
Plastic units - HDPE
Slides - fibreglass
Ropes and nets - polypropylene with a steel internal core
Roof - HPL

Finish

null
null
null

Description

The tower unit support structure is made from 100 x 100 mm thick glued wooden supports. This solution ensures maximum protection against cracking, which is common for products made from solid wood. The wooden supports are impregnated and coated with a triple layer of lacquer, which meets the terms and conditions of the EN71/3 Standard (safe for children's toys). The structures are anchored into the ground in steel plates, which are protected against corrosion by hot-dip galvanizing and fixed in a concrete bed. The anchors are fastened to the play unit with bolts and their structure ensures that they are not in direct contact with the ground. All other metallic elements are also zinc coated and treated with baked paint KOMAXIT according to the RAL colour system.
The slides are made from fibreglass. The surfaces of the slides, steps, etc. are made from high quality HDPE plastic (high density coloured polyethylene, which is characterised by high colour stability, UV resistance but mainly safety as it doesn't break and therefore there is no danger of injury to children by sharp fragments). The rope is made using HERKULES material (16 mm thick ropes made from polypropylene with a steel internal core). The platform and the ramp are made from water-proof plywood designed for external environment or from HDPE should the client require. The roof is made from HPL (High-pressure laminate, which is characterised by high colour stability, UV resistance and water resistance). All fastening material is galvanized or stainless steel.

Equipment

Tower, 3x slide, A-shaped roof, sloping ramp with the rope and HDPE steps.

We reserve the right to change products without prior notice, which will, from our point of view, improve quality. The pictures are only informative and the products shown may differ from the products that we currently supply. We also reserve the right to make printing errors and assume no responsibility for their possible consequences. Otherwise, our terms and conditions apply.