www.zaidimuaiksteles-bonita.lt

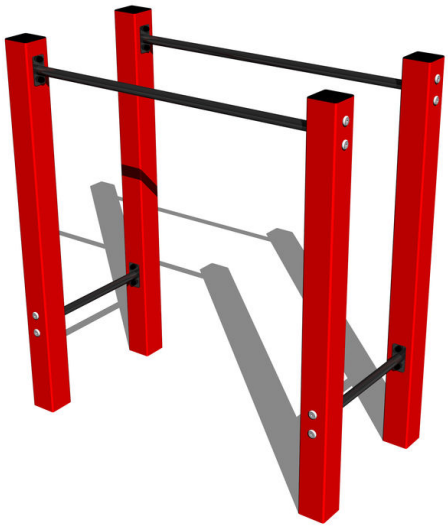

Street workout element WP002RD-Q - red (Coastal region)

Product type WP-002RD-10-Q

Basic information

Age category	Not specified
Minimum area	5 m x 4 m
Equipment measurements	0,7 m x 1,34 m x 1,31 m
Free fall height:	1 m
Load capacity:	78 kg
Max. number of users:	1
Fall zone: EN 1177	null
Designation:	exterior
Availability of spare parts:	supplied by the
Certificate of Compliance:	ČSN EN 16630

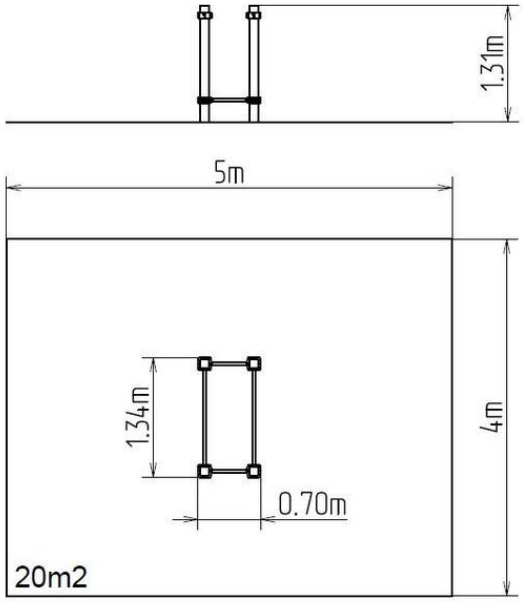

Material

Metal units - structural steel

Finish

null
null

Description

The support structure of the workout element is made of structural steel (metal profile 100 x 100 × 3 mm) which is protected against corrosion by zinc coating, resulting in a very prolonged service life of the workout elements, and coating with baked paint KOMAXIT according to the RAL colour system. These structures are anchored to concrete footings. All other metallic elements, such as handles, parallel bars etc., are also zinc coated and treated with baked paint KOMAXIT according to the RAL colour system or, if required by the customer, the elements can be made in stainless steel. All connecting material is zinc or stainless steel coated.

Equipment

Color variants: blue-black, red-black, yellow-black, green-black, grey-black, orange-black.

We reserve the right to change products without prior notice, which will, from our point of view, improve quality. The pictures are only informative and the products shown may differ from the products that we currently supply. We also reserve the right to make printing errors and assume no responsibility for their possible consequences. Otherwise, our terms and conditions apply.